Model HCA200 Bio-Probe

Sessile Bacteria & Biofilm Sampling System for High Pressure Access Fittings

As an authorized Metal Samples distributor, Imotron supplies the Model HCA200 Bio-Probe for collecting sessile bacteria samples in oil and gas producing systems, pipelines, tanks, vessels, and industrial water handling networks. Designed to mount directly into standard 2-inch high-pressure access systems, the Bio-Probe exposes replaceable metal sample elements directly to the process stream for accurate Microbiologically Influenced Corrosion (MIC) evaluation.

> **Why Monitor Sessile Bacteria?** The bacterial population attached to a system's internal metal surface (sessile biomass) is far more relevant to corrosion than planktonic bacteria suspended in the bulk fluid, as only surface-attached bacteria cause localized pitting and MIC. An effective biocide program must verify control over attached biomasses on the pipe wall.

1. Assembly Components & Standard Materials

Each Model HCA200 Bio-Probe assembly holds six replaceable cylindrical sample elements ("bullets") inside a Delrin sample holder, allowing multiple microbiological or surface analyses from a single retrieval cycle.

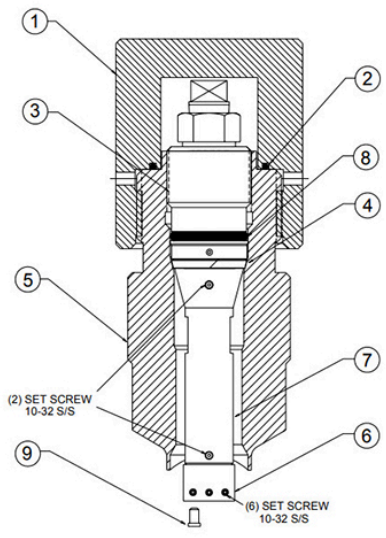

Model HCA200 Bio-Probe Assembly — Component Identification (Items 1–9)

Item	Description	Standard Material
1	**Protective Cover**	Carbon Steel
2	**O-ring**	Viton®
3	**Plug**	316 Stainless Steel
4	**Packing**	25% G.F. Teflon®
5	**Access Fitting**	Carbon Steel
6	**Bacteria Sample Holder**	Delrin
7	**Bio-probe Rod**	316 Stainless Steel
8	**O-ring**	Viton®
9	**Sample Element "Bullet"**	Carbon Steel

2. Model HCA200 Ordering Information & Accessories

Specify the desired insertion length when ordering the complete Bio-Probe assembly, along with replacement sample elements and the corresponding HP™ or MH™ solid plug.

Part Number	Description & Configuration Details
HCA2158 - [LLLL]	**Bio-Probe Assembly with Delrin Holder:** Complete fixture assembly with 316 SS rod and Delrin holder. Replace `[LLLL]` with desired insertion length in inches (2 decimal places, e.g., `HCA2158-0612` for 6-1/8").
EL4383770900000	**Biological Sample Elements ("Bullets") — Carbon Steel:** Replacement sample studs with an exposed surface area of 0.077 in² (0.50 cm²). *Six (6) elements required per bacteria sample holder.*
HA700645158	**Solid Plug — MH™ High Pressure Access System (316 SS):** Pressure-retaining solid plug with coarse ACME threads for Metal Samples MH™ 2" access fittings.
HA700644158	**Solid Plug — HP™ High Pressure Access System (316 SS):** Pressure-retaining solid plug compatible with standard HP™ 2" high-pressure access fittings.

Teflon® is a registered trademark of DuPont. Viton® is a registered trademark of DuPont Dow Elastomers LLC.

Implement Sessile Biofilm & MIC Monitoring in Your Facility
Contact Imotron Instruments for Bio-Probe length sizing, HP™/MH™ solid plug selection, and replacement biological sample elements.